	ITEM	Material	DESCRIPTION
1	LE4560	D-ZLAF52LAM	MOLDED ASPHERE
2	3420012	SUS 304L	HOUSING
3	3420001	SUS 304L	FC/APC CONNECTORS

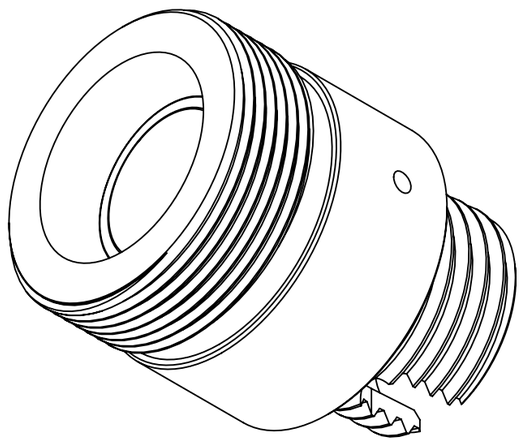

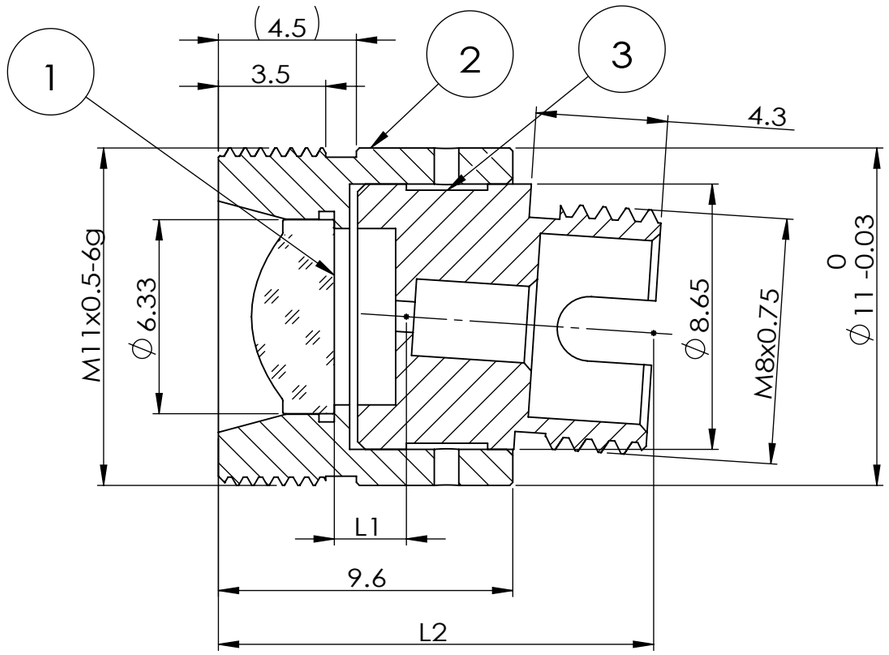

SECTION A-A

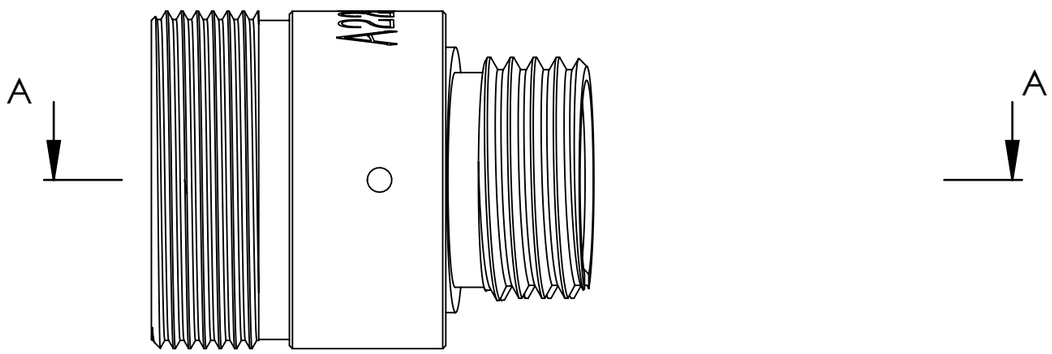

PART NUMBER	λ	ALIGNMENT FIBER	LI (mm)	L2 ±0.25 (mm)
FE456010405	405nm	C405	2.78	15.23
FE456010532	532nm	460HP	2.91	15.36
FE456010633	633nm	SM600	2.96	15.41
FE456010780	780nm	780HP	3.00	15.45
FE456011064	1064nm	HI-1060	3.04	15.49
FE456011310	1310nm	SMF-28e	3.07	15.51
FE456011550	1550nm	SMF-28e	3.09	15.53

DO NOT SCALE DRAWING.

DRAWING PROJECTION.

	NAME	DATE
DRAWN		
CHK'D		
APPV'D		

GHOPTICS 光皓光学

GH Optics (Jiangsu) Co., Ltd.
www.ghoptics.cn
Add: No.298 Daijiamen Road, Zhenjiang, Jiangsu, China 212000

TITLE: Connectorized Collimators with FC/APC

DWG NO. FE456010405

UNIT: mm | SIZE: A3 | SHEET 1 OF 1 | REV. A